Models

Rotary parking system (8 Sedan cars)

Specifications

Technical Specifications	
Model	MS 8 L
Parking Capacity	8 Sedan cars
Available system Dimensions	6300 (Length) x 5000 (Width) x 9500 (Height)
Available Car Dimensions	5200 (Length) x 2000 (Width) x 1550 (Height)
Available Car Weight	Maximum 2500 KG
Driving Type	Chain
Driving Motor	Geared motor 9 KW
Speed	3.1_4.2 M/Min
Electricity	AC 220/380 V x 3P x 50Hz

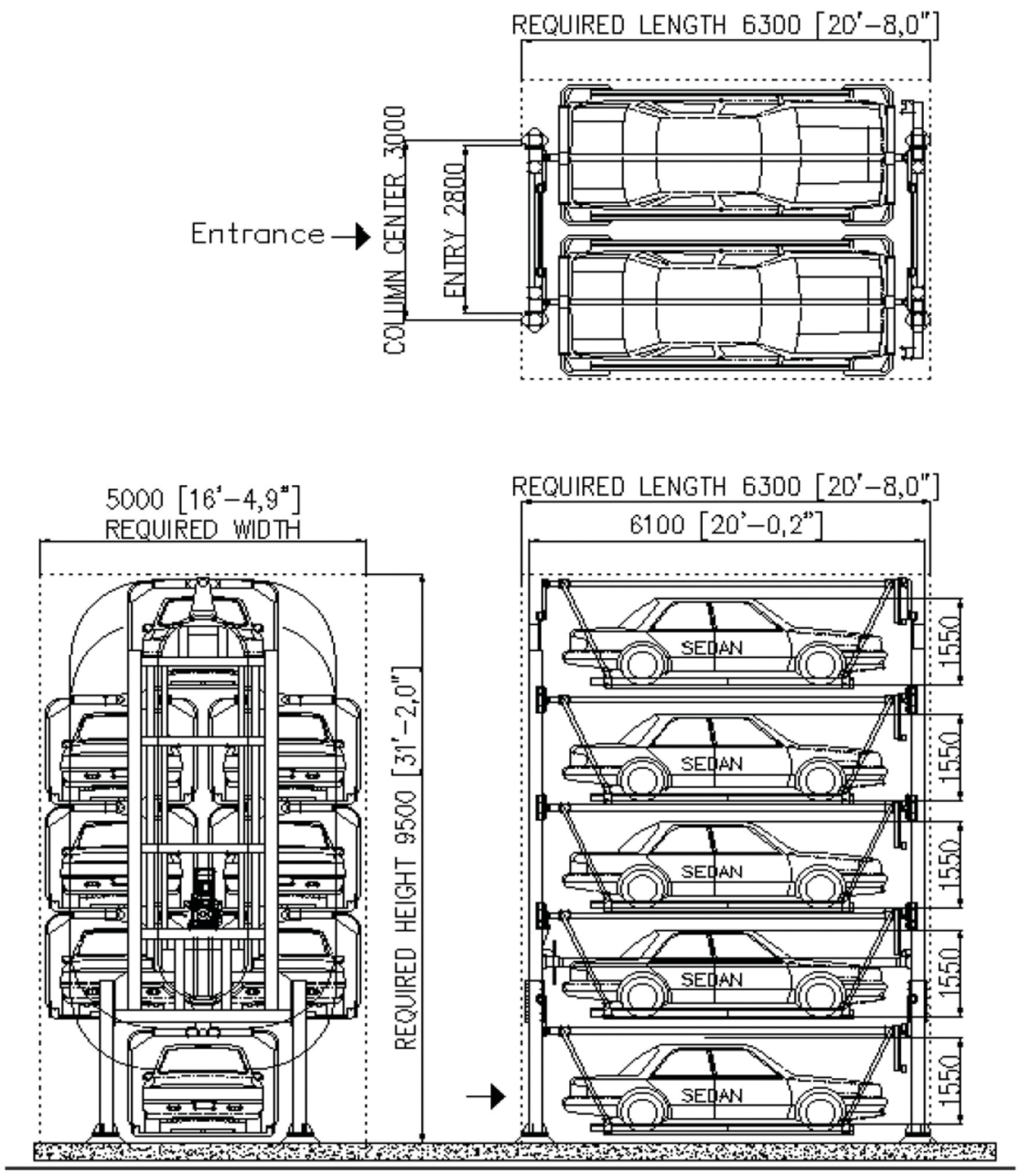

Models

Rotary parking system (8 SUV cars)

Specifications

Technical Specifications	
Model	MS 8 SU
Parking Capacity	8 SUV Cars
Available system Dimensions	3600 (Length) x 5300 (Width) x 11050 (Height)
Available Car Dimensions	5200 (Length) x 2000 (Width) x 1850 (Height)
Available Car Weight	Maximum 2500 KG
Driving Type	Chain
Driving Motor	Geared motor 9 KW
Speed	4_5 M / Min
Electricity	AC 220/380 V x 3P x 50Hz

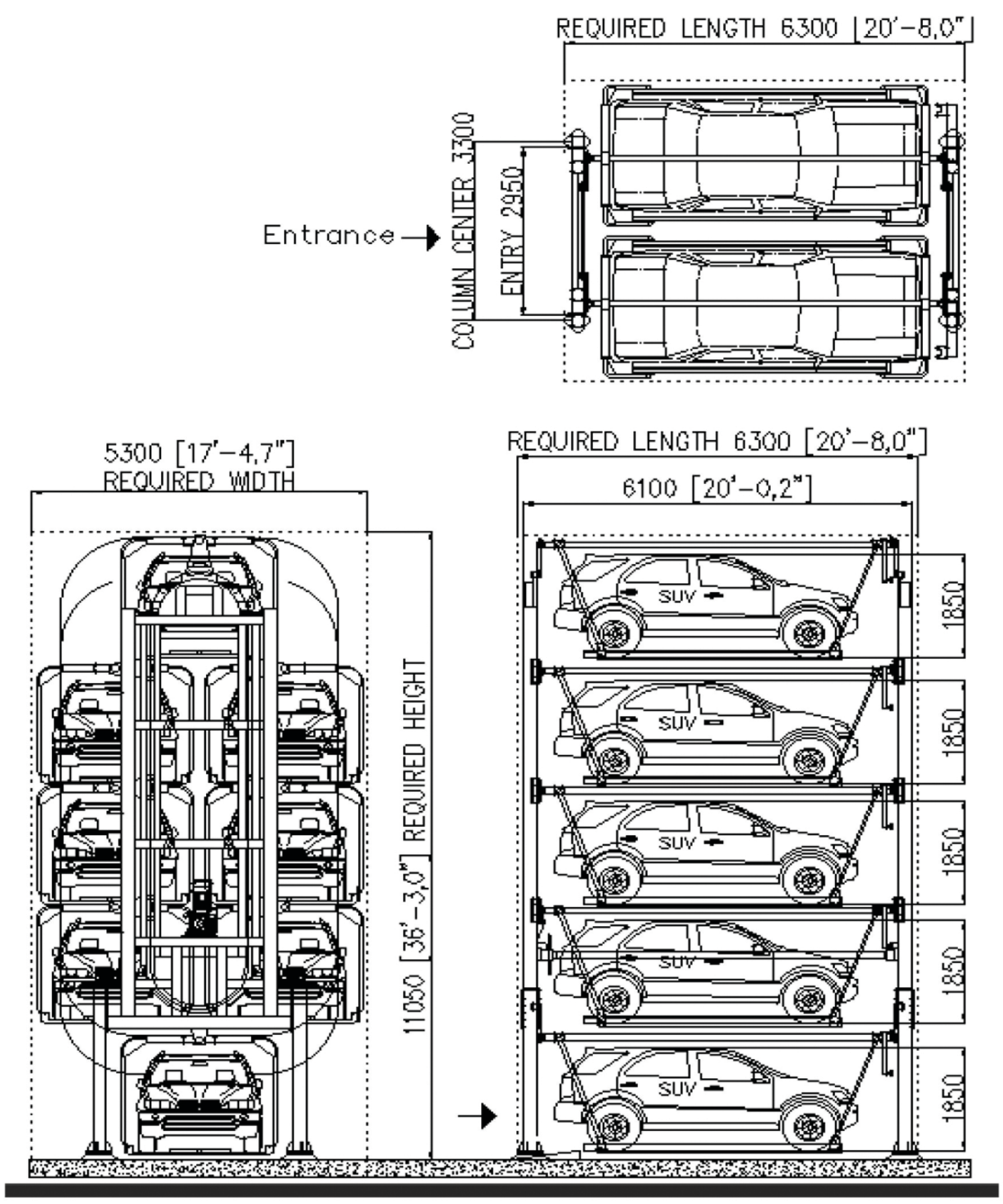

Models

Rotary parking system (10 Sedan cars)

Specifications

Technical Specifications	
Model	MS 10 L
Parking Capacity	10 Sedan Cars
Available system Dimensions	3600 (Length) x 5000 (Width) x 11300 (Height)
Available Car Dimensions	5200 (Length) x 1900 (Width) x 1550 (Height)
Available Car Weight	MAXIMUM 2500 KG
Driving Type	Chain
Driving Motor	Geared motor 11 KW
Speed	3.1_4.2 M/Min
Electricity	AC 220/380 V x 3P x 50Hz

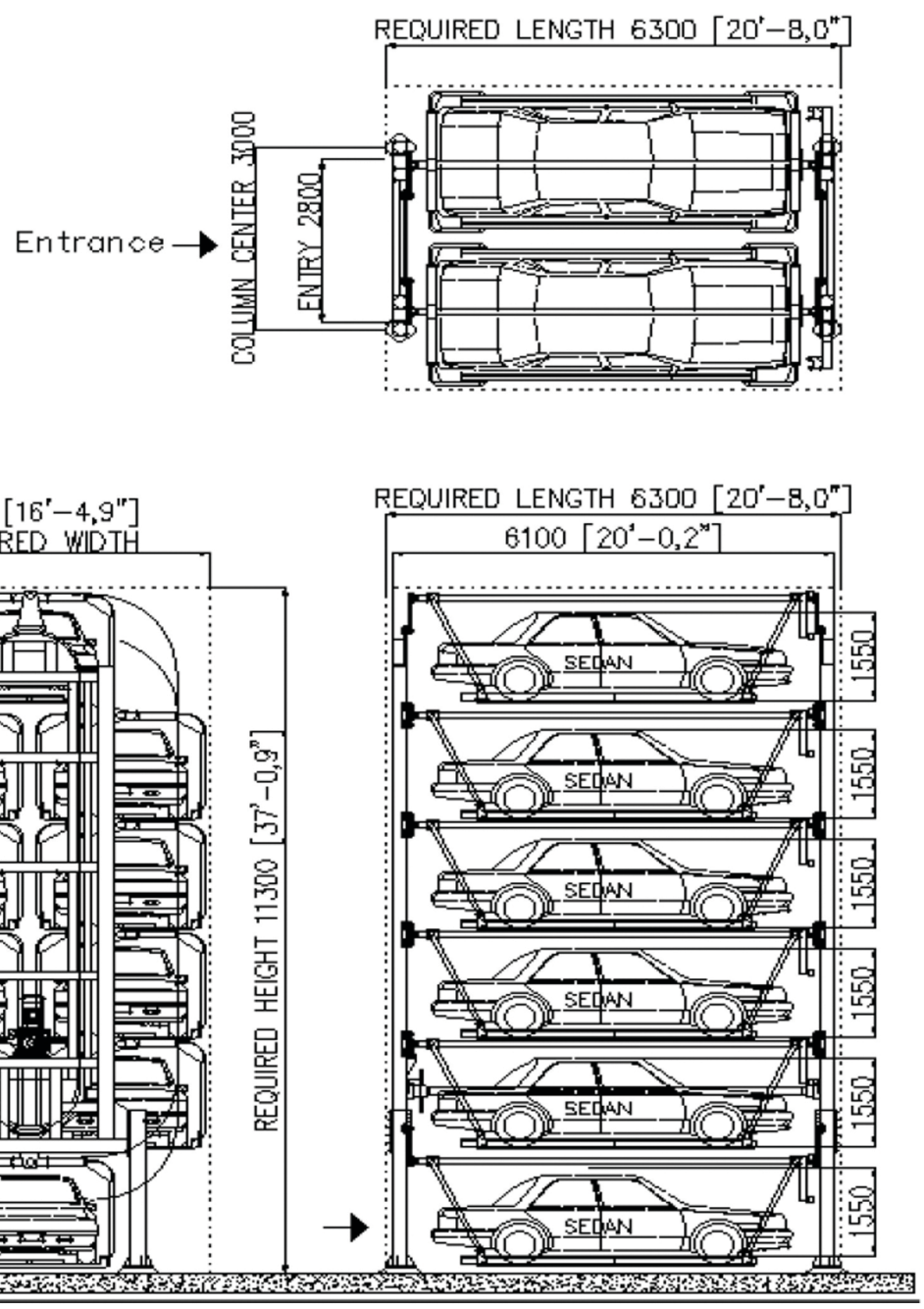

Models

Rotary parking system (10 SUV cars)

Specifications

Technical Specifications	
Model	MS 10 SU
Parking Capacity	10 SUV Cars
Available system Dimensions	6300 (LENGTH) X 5300 (WIDTH) X 13150 (HEIGHT)
Available Car Dimensions	5200 (LENGTH) X 2000 (WIDTH) X 1850 (HEIGHT)
Available Car Weight	Maximum 2500 KG
Driving Type	Chain
Driving Motor	Geared Motor 9 Kw
Speed	4_5 M / Min
Electricity	AC 220/380 V x 3P x 50Hz

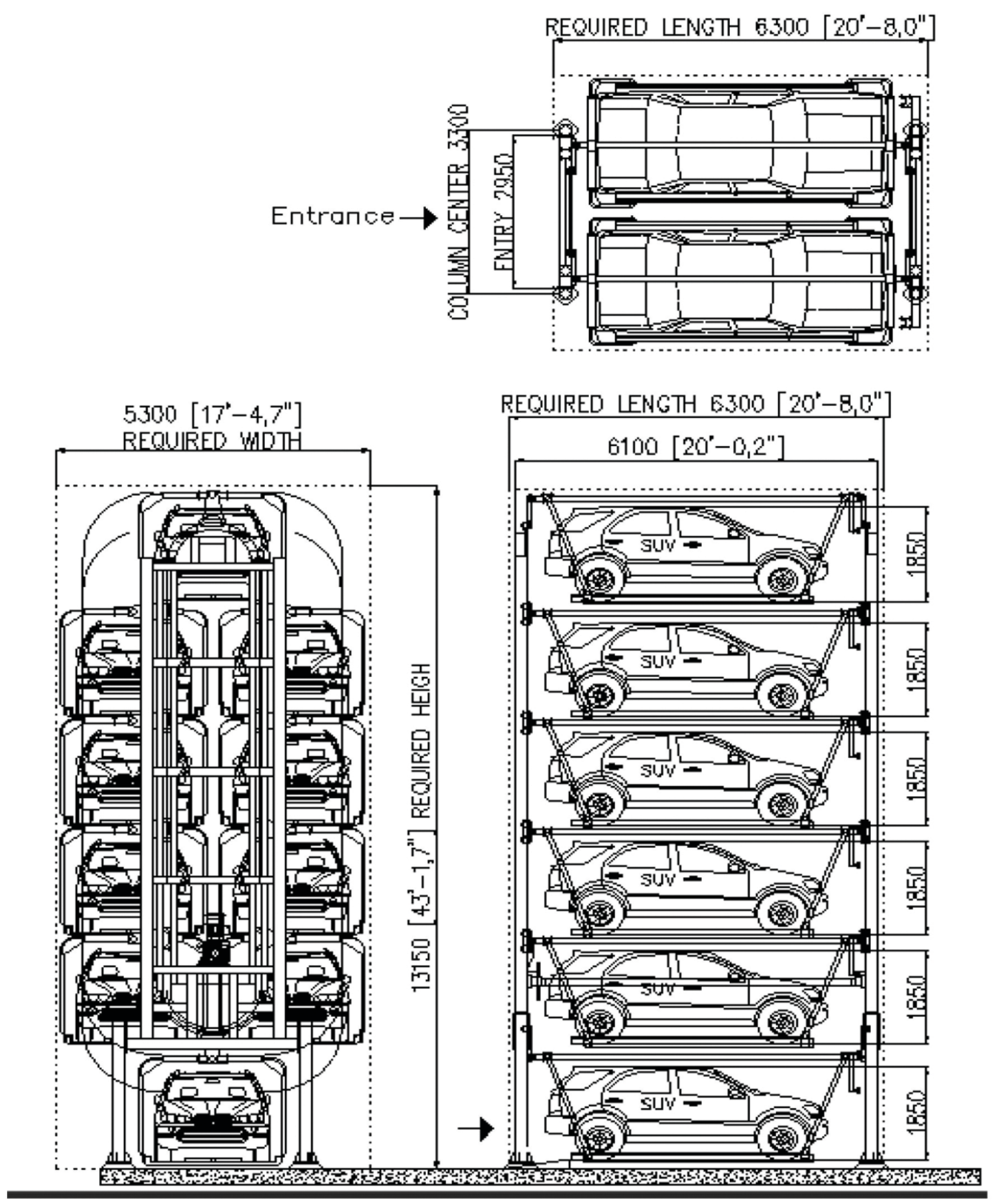

Models

Rotary parking system (12 Sedan cars)

Specifications

Technical Specifications	
Model	MS 12 L
Parking Capacity	12 Sedan Cars
Available system Dimensions	6300 (Length) x 5000 (Width) x 13100 (Height)
Available Car Dimensions	5200 (Length) x 1900 (Width) x 1550 (Height)
Available Car Weight	Maximum 2500 KG
Driving Type	Chain
Driving Motor	Geared Motor 13 Kw
Speed	3.6_4.2 M / Min
Electricity	AC 220/380 V x 3P x 50Hz

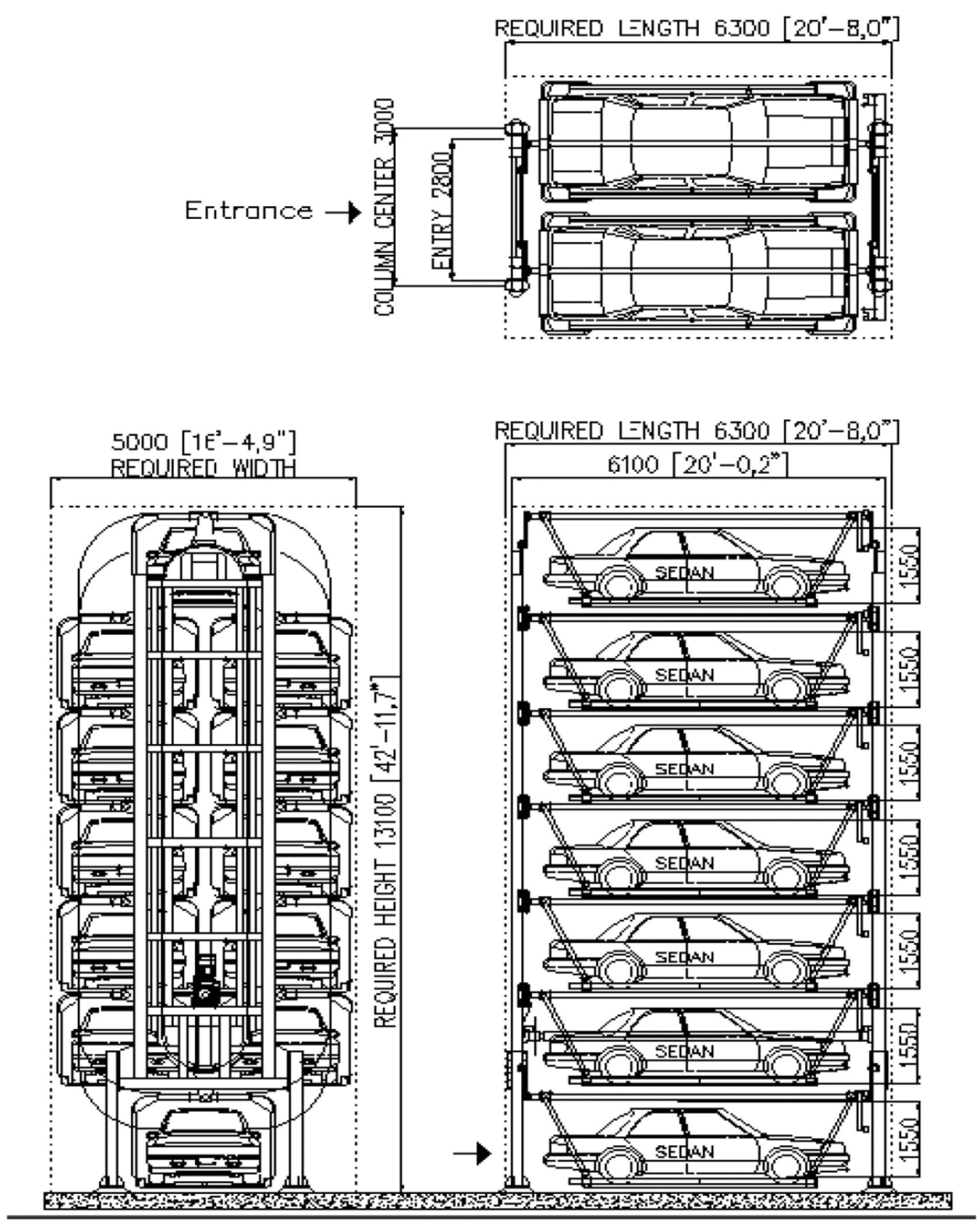

Models

Rotary parking system (12 SUV cars)

Specifications

Technical Specifications	
Model	MS 12 SU
Parking Capacity	12 SUV Cars
Available system Dimensions	6300 (Length) x 5300 (Width) x 15250 (Height)
Available Car Dimensions	5200 (Length) x 2000 (Width) x 1850 (Height)
Available Car Weight	Maximum 2500 KG
Driving Type	Chain
Driving Motor	Geared Motor 9 Kw
Speed	4_5 M / Min
Electricity	AC 220/380 V x 3P x 50Hz

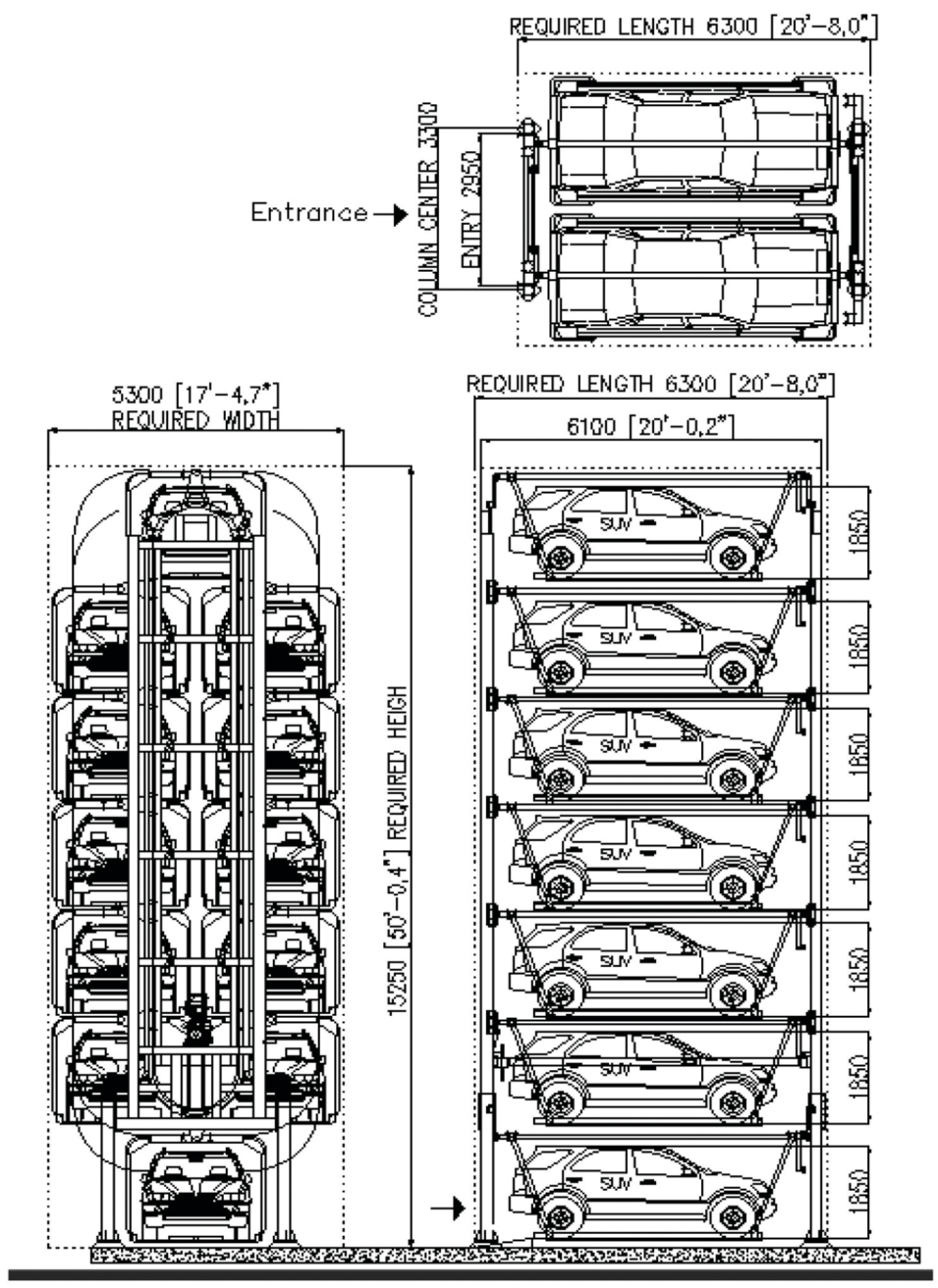

Models

Rotary parking system (14 Sedan)

Specifications

Technical Specifications	
Model	MS 14 L
Parking Capacity	14 Sedan Cars
Available Car Dimensions	6300 (Length) x 5000 (Width) x 14900 (Height)
Available Car Dimensions	5200 (Length) x 1900 (Width) x 1550 (Height)
Available Car Weight	Maximum 2500 KG
Driving Type	Chain
Driving Motor	Geared Motor 15 Kw
Speed	3.6_4.2 M/ Min
Electricity	AC 220/380 V x 3P x 50Hz

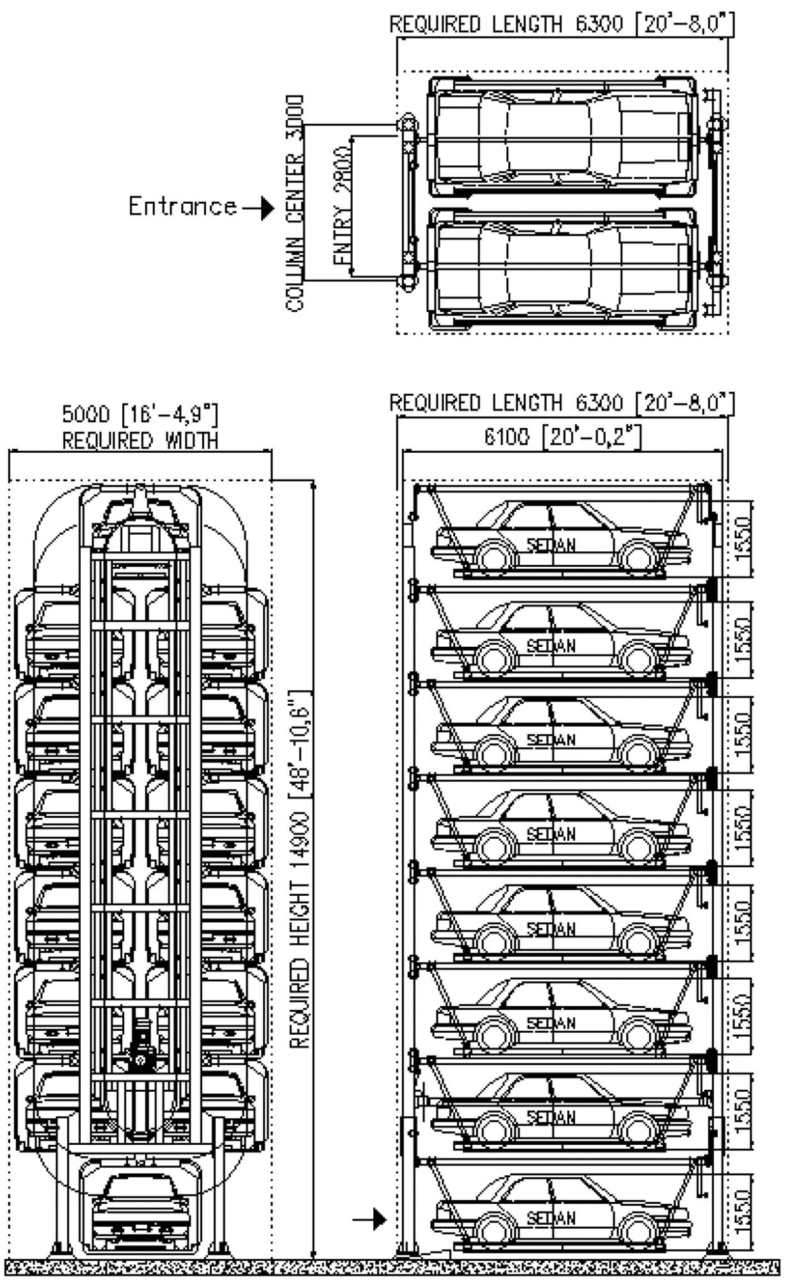

Models

Rotary parking system (16 Sedan)

Specifications
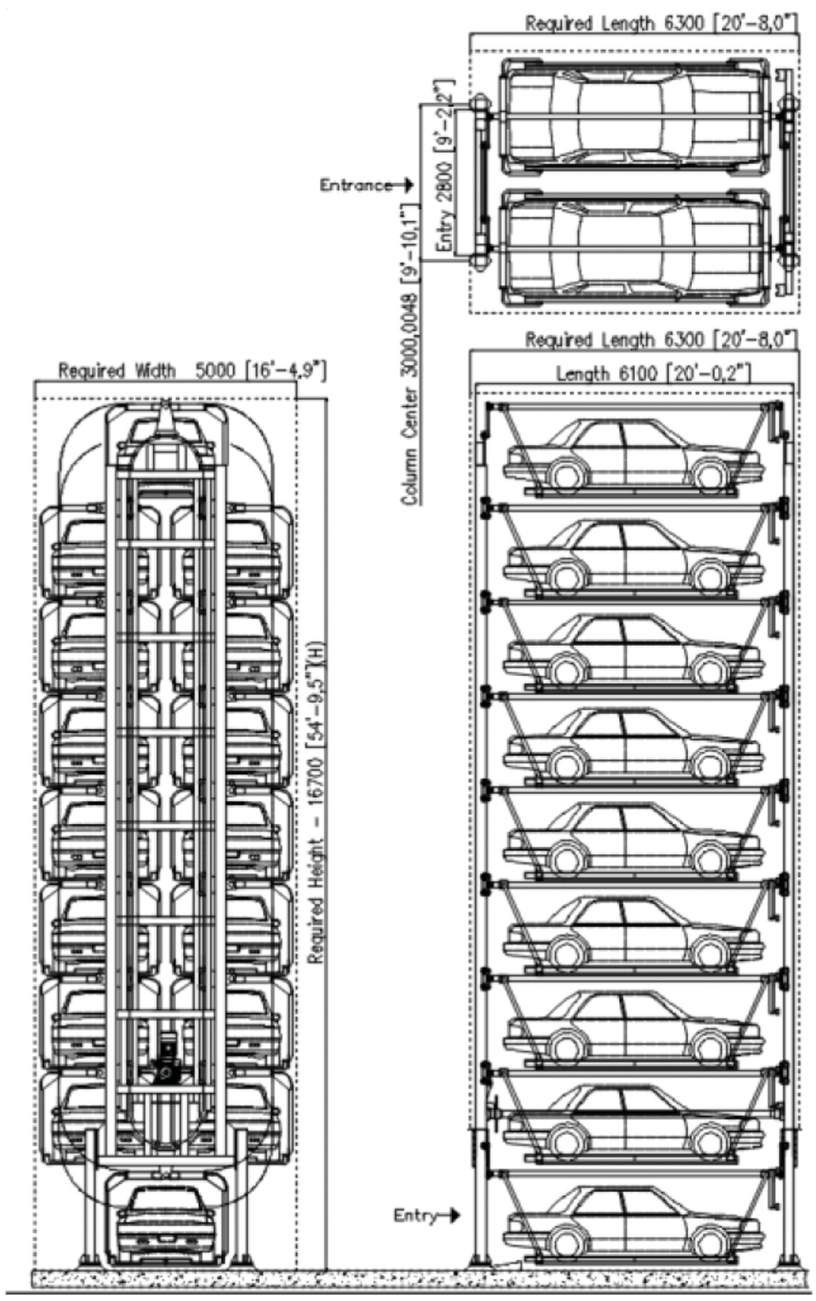
Technical Specifications	
Model	MS 16L
Parking Capacity	16 Cars
Available system Dimensions	6300 (Length) x 5000 (Width) x 16700 (Height)
Available Car Dimensions	5200 (Length) x 1900 (Width) x 1550 (Height)
Available Car Weight	1850 KG
Driving Type	Chain
Driving Motor	15 Kw
Speed	5_8 M / Min
Electricity	AC 220/380 V x 3P x 60Hz